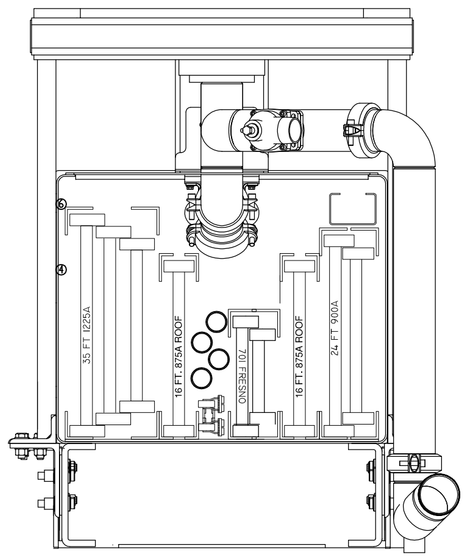

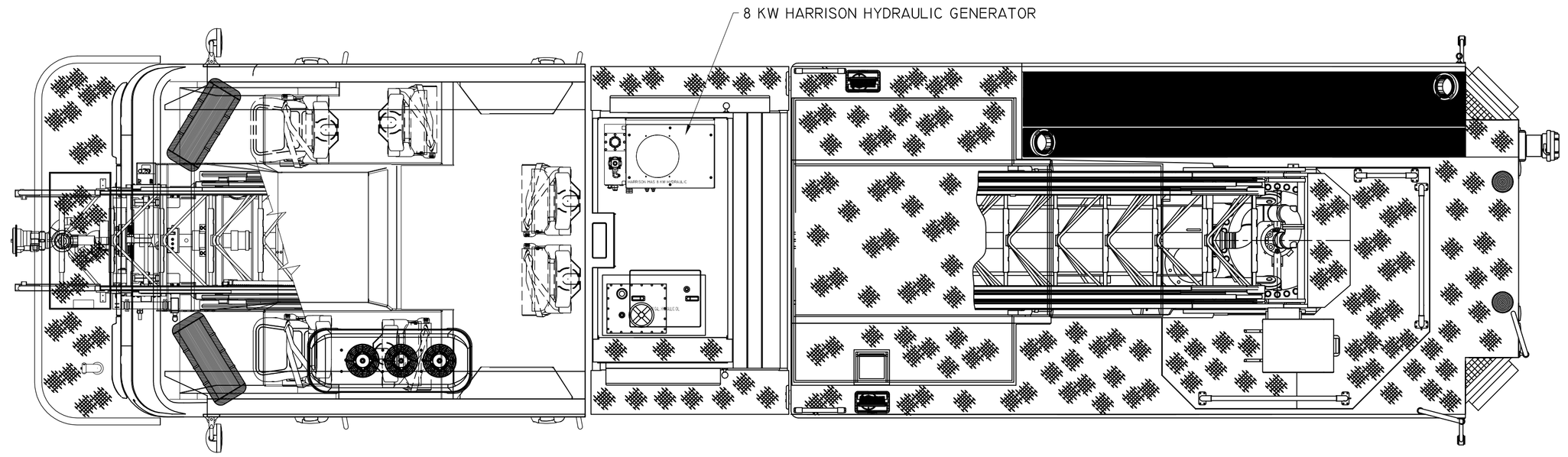

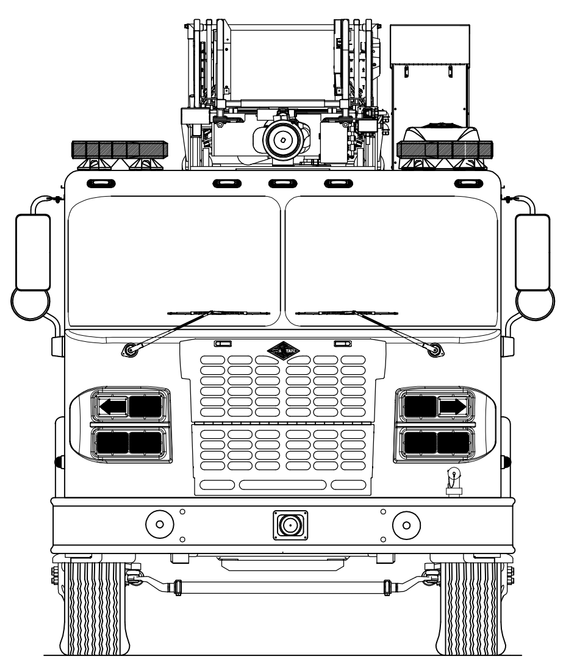

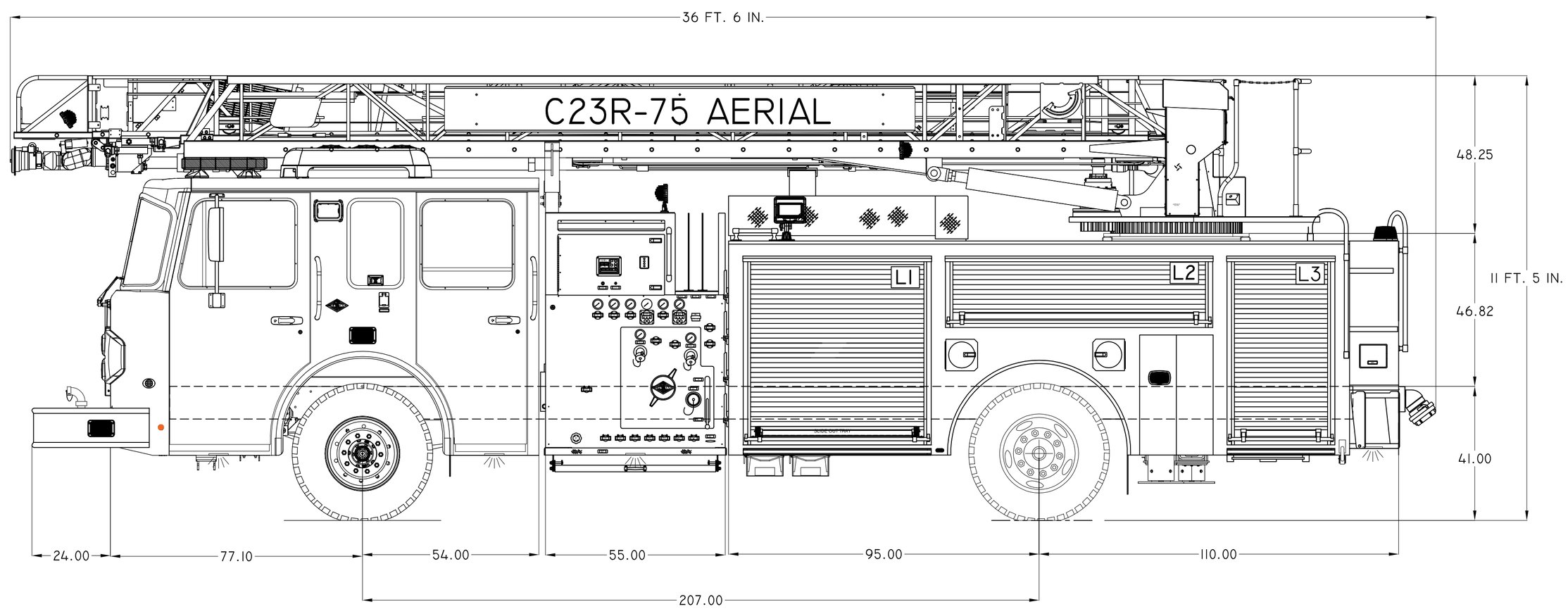

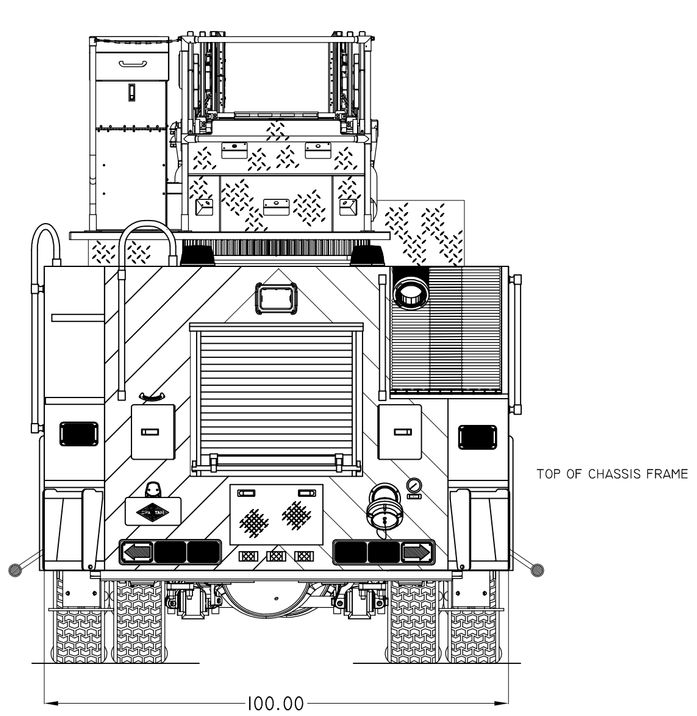

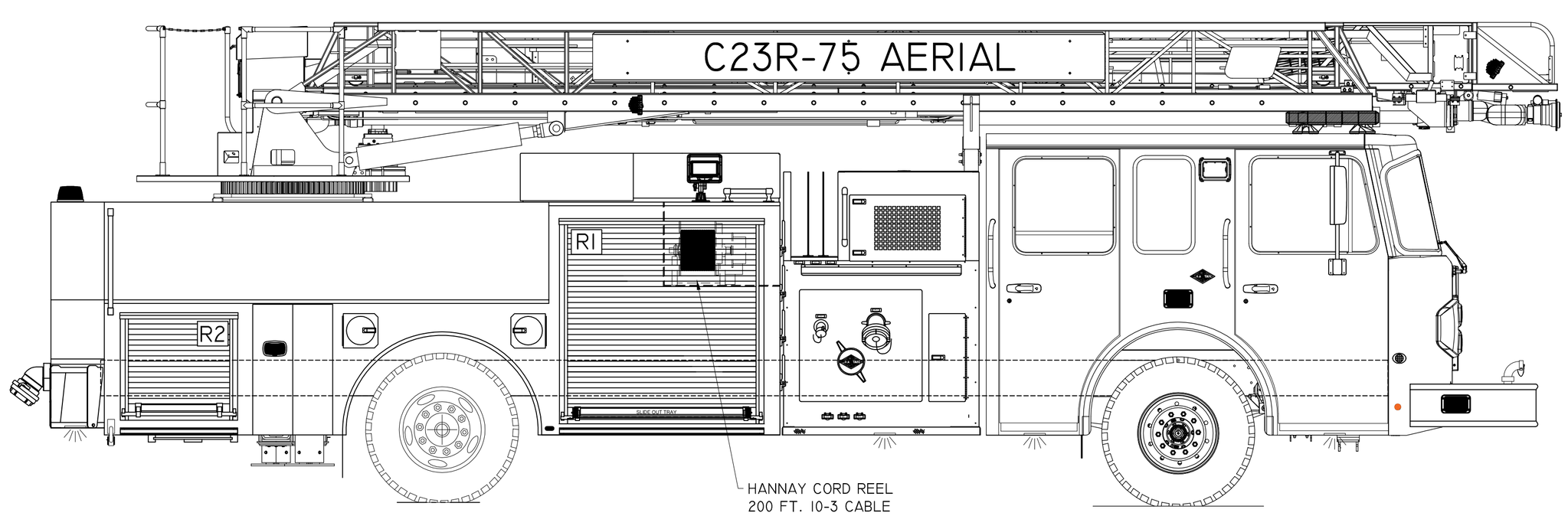

SPARTAN

CHASSIS:	SPARTAN METRO STAR MFD
ENGINE:	CUMMINS ISL 450HP
TRANSMISSION:	ALLISON 3000 EVS
AXLES:	22,000# FRONT / 33,000# REAR
MODEL:	C23R-75 AERIAL LADDER
WATER/FOAM:	500 / 0 GALLONS
PUMP:	HALE Q-MAX 2000GPM
FOAM SYSTEM:	N/A
GENERATOR:	HARRISON 8KW HYDRAULIC

COMPARTMENT DIMENSIONS

I.D.	OPENING	INTERIOR
L1	55.0-W x 56.0-H	57.75-W x 61.75-H x 24.75-D
L2	80.0-W x 20.0-H	81.75-W x 26.0-H x 24.75-D
L3	30.5-W x 56.0-H	33.25-W x 61.75-H x 24.75-D
R1	55.0-W x 56.0-H	57.75-W x 61.75-H x 24.75-D
R2	30.5-W x 24.0-H	33.25-W x 29.25-H x 24.75-D

GROUND LADDERS:
ONE DUO-SAFETY 35 FT. 1225A 3-SECTION
ONE DUO-SAFETY 24 FT. 900A 2-SECTION
TWO DUO-SAFETY 16 FT. ROOF LADDERS
ONE DUO-SAFETY 14 FT. 701 FRESNO
ONE DUO-SAFETY 10 FT. 585A FOLDER
FOUR HOOKS & POLES:
(1) FIRE HOOKS NH-12 NATIONAL HOOK-12 FT
(1) FIRE HOOKS NH-8 NATIONAL HOOK-8 FT
(2) FIRE HOOKS NH-6 NATIONAL HOOK-6 FT

CUSTOMER

THIS DRAWING IS A CLOSE APPROXIMATION OF YOUR FIRE APPARATUS. IN ALL CASES WHERE THE DRAWING AND THE WRITTEN SPECIFICATION DIFFER, THE SPECIFICATION SHALL PREVAIL. PLEASE WORK WITH YOUR DEALER TO ASSURE THAT THE WRITTEN SPECIFICATION REPRESENTS WHAT YOU WANT IN YOUR FINISHED PRODUCT. SPARTAN EMERGENCY RESPONSE BUILDS TO THE WRITTEN SPECIFICATION, NOT THE DRAWING TO ASSURE THAT YOUR NEEDS ARE MET.

PROPRIETARY AND CONFIDENTIAL

THE INFORMATION CONTAINED IN THIS DRAWING IS THE SOLE PROPERTY OF SPARTAN EMERGENCY RESPONSE. ANY REPRODUCTION IN PART OR AS A WHOLE WITHOUT THE WRITTEN PERMISSION OF SPARTAN EMERGENCY RESPONSE IS PROHIBITED. SPARTAN MOTORS USA, INC. D/B/A SPARTAN EMERGENCY RESPONSE.

REV	DATE	DESCRIPTION	NAME
0	1/5/18	INITIAL DRAWING	WB

SCALE: NOT TO SCALE

2019 C23R-75 DEMO

TRUCK NUMBER: 000000

3-071-0182